SIMPLEBLUEPRINTS

Building this deck, stage by stage

12 x 20 attached deck

Deck size	**20'-0" wide x 12'-0" deep**
Height above grade	**4'-0"**
Framing	**2x8 joists at 16 in. o.c.**
Beams	**3-ply 2x12**
Posts	**6x6, 4 total**
Footings	**16 in. diameter, 36 in. deep**
Stages	**19**

The deck drawn at each stage is your deck, at the size and framing on your plan sheets. The close-up views show how each connection is made.

Work from the plan sheets for dimensions. Verify all lengths on site before cutting.

STAGE 1 Mark out the deck footprint

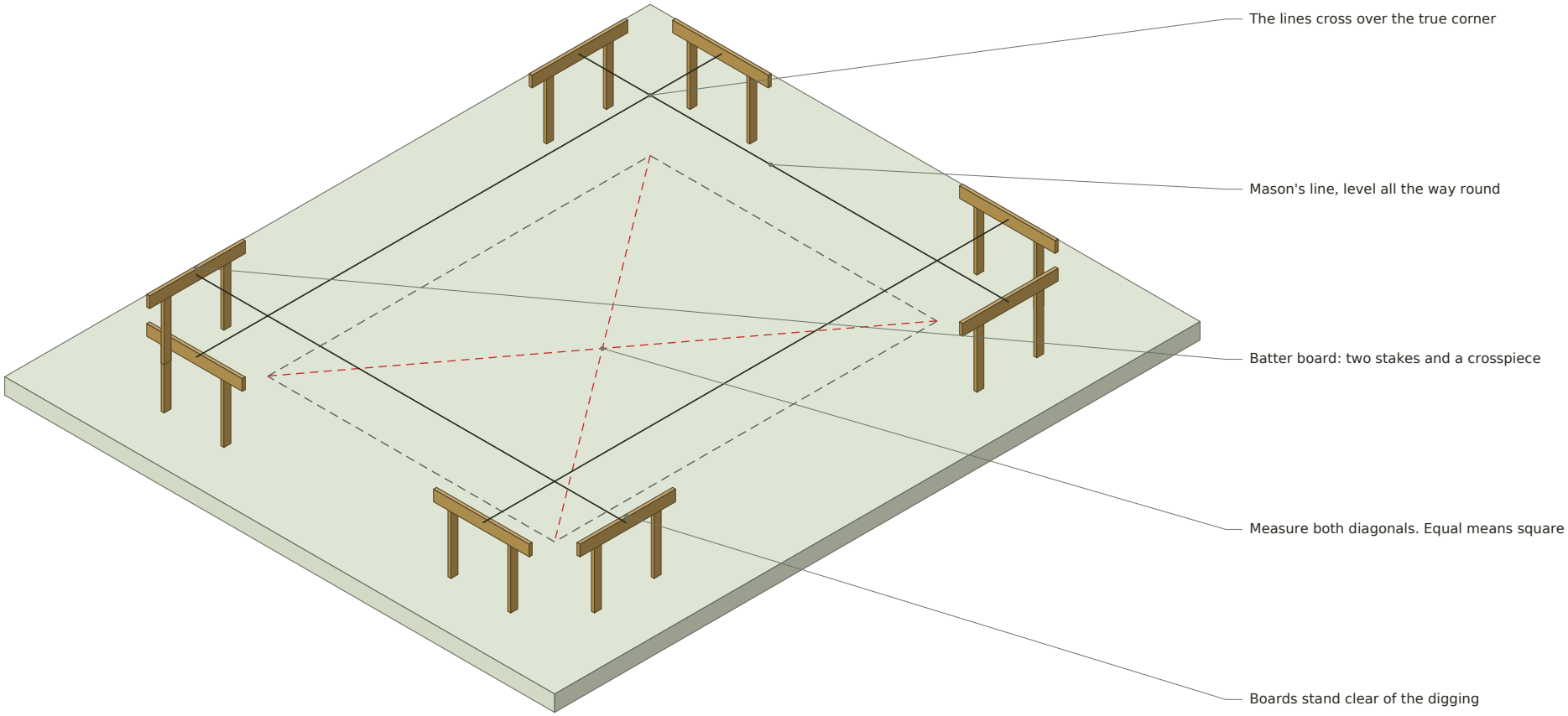

Set batter boards back from each corner and run string lines between them. Work to the outside face of the rim joists, not to the centre of anything, so the lines describe the deck you are actually going to build.

STAGE 2 Square the layout

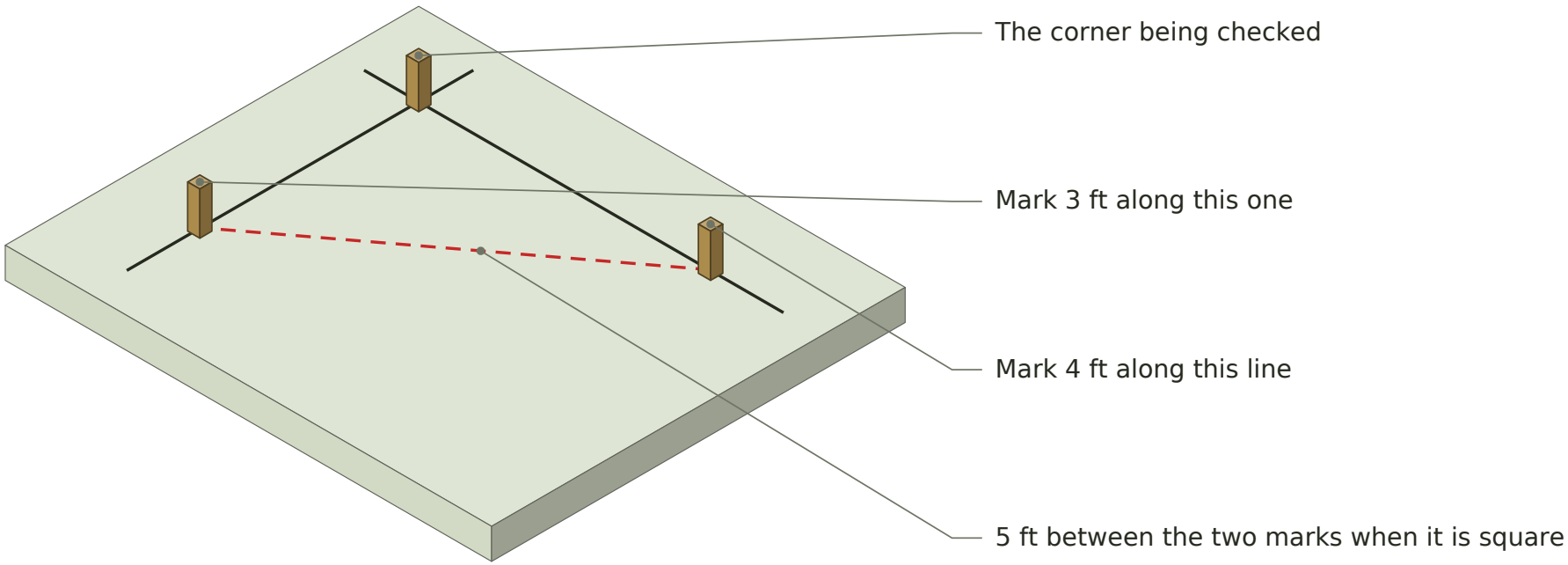

Measure three feet along one string and four along the other. When the distance between those marks is exactly five feet the corner is square. Check both diagonals across the whole layout before you dig anything.

STAGE 3 Bolt the ledger to the house

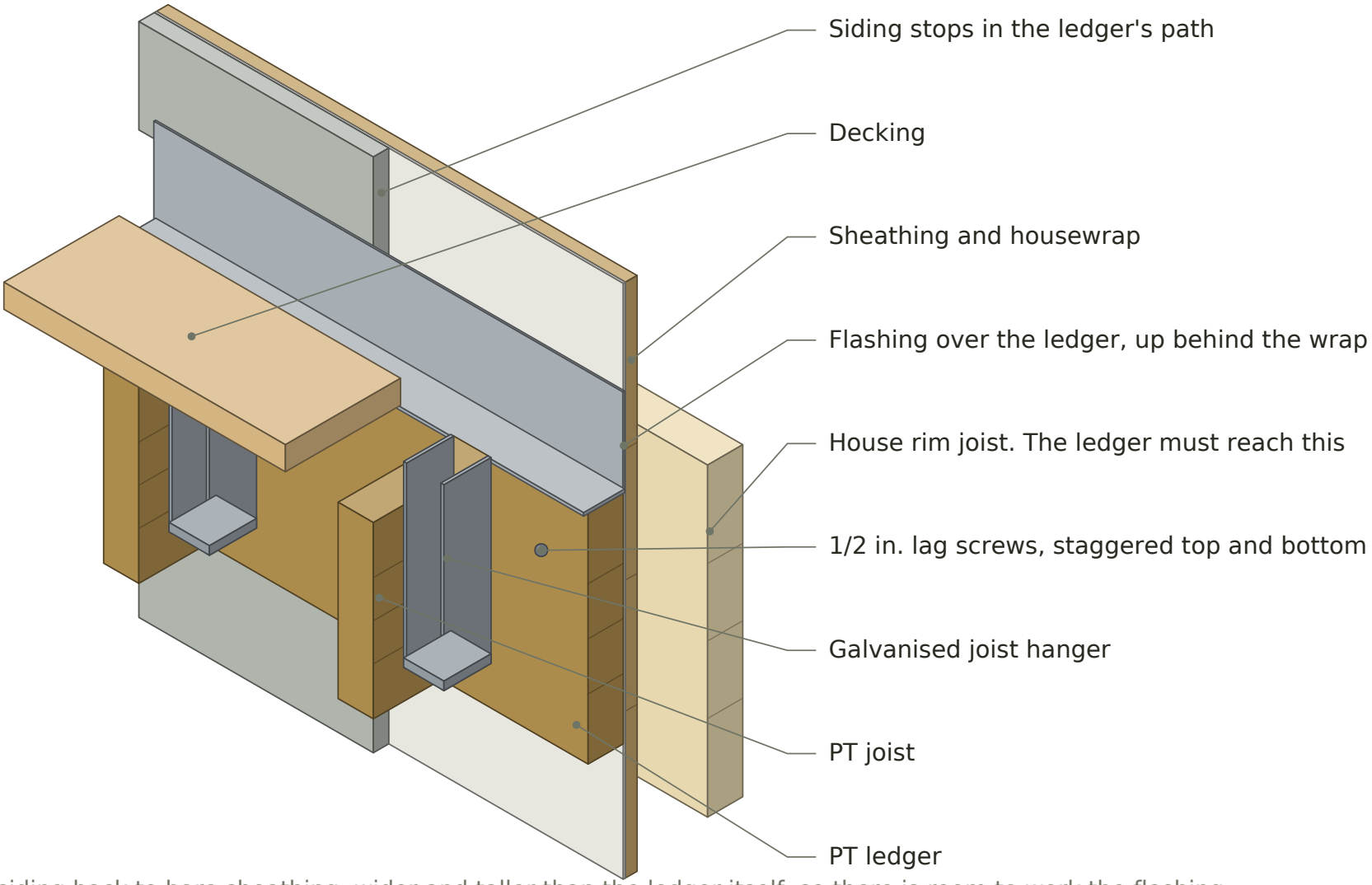

Cut the siding back to bare sheathing, wider and taller than the ledger itself, so there is room to work the flashing in behind it at the next stage. Every fastener has to pass through the sheathing and bite at least three inches into the house framing behind it, because sheathing on its own holds nothing. Stagger them high and low at the spacing on the plan sheets, and get the board level: it is the line the rest of the deck is measured from.

STAGE 4 Flash the ledger

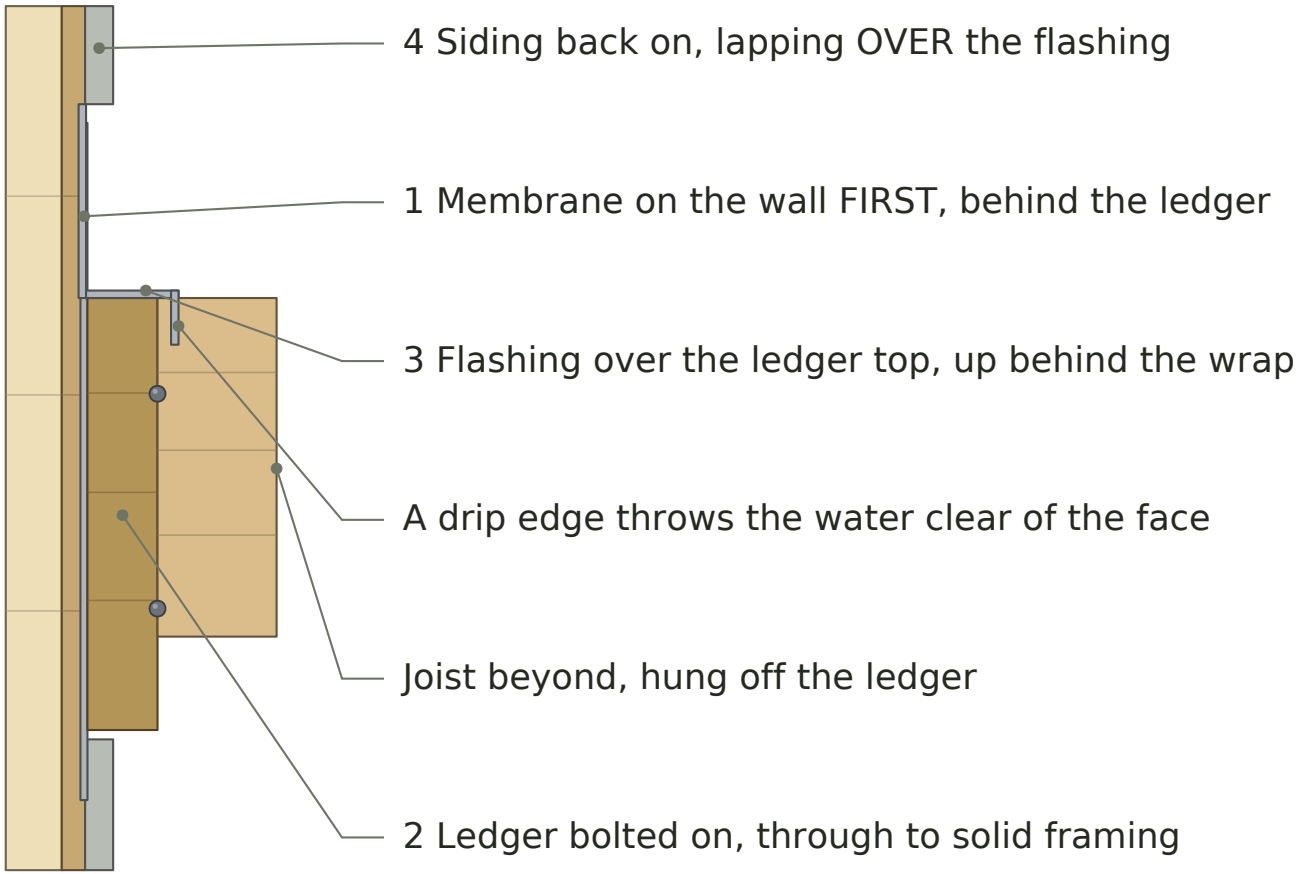

The only thing that matters at this stage is the order the layers go on. Membrane onto the sheathing first, then the ledger over it, then metal flashing over the ledger's top edge and up behind the housewrap, then the siding lapping back down over the flashing. Each layer sheds water onto the one below it. Reverse any two and you have built a funnel into the house rim joist. Do it now, because once the joists are hung you cannot reach it.

STAGE 5 Locate every footing centre

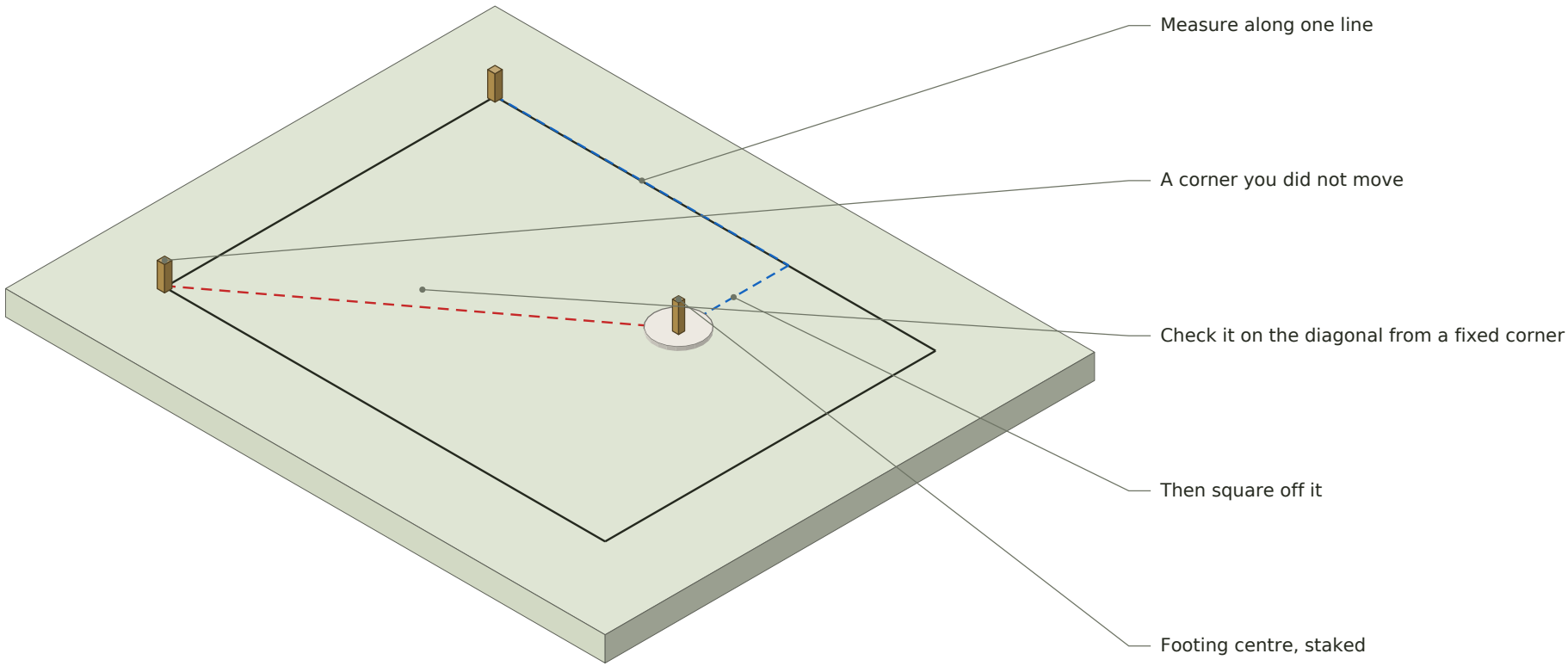

Take each footing centre from two measurements off fixed points rather than by pacing along a string. Two diagonals fix a point; one measurement along a line does not.

STAGE 6 Dig the holes and have them inspected

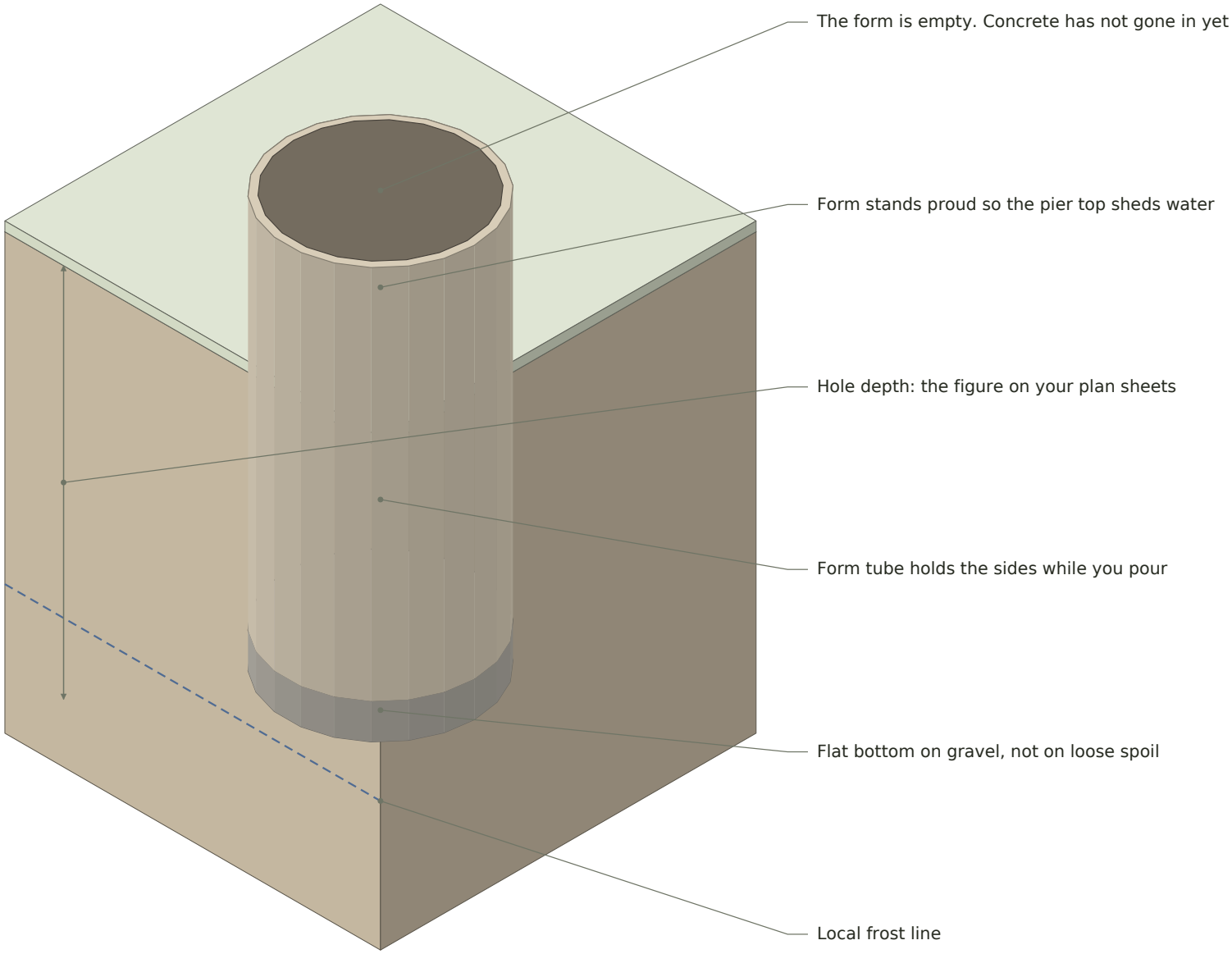

Dig to the depth given on the plan sheets and keep the sides clean. Most inspectors want to see the open holes before any concrete goes in, and it is the one part of the deck you cannot revisit later.

STAGE 7 Pour the footings

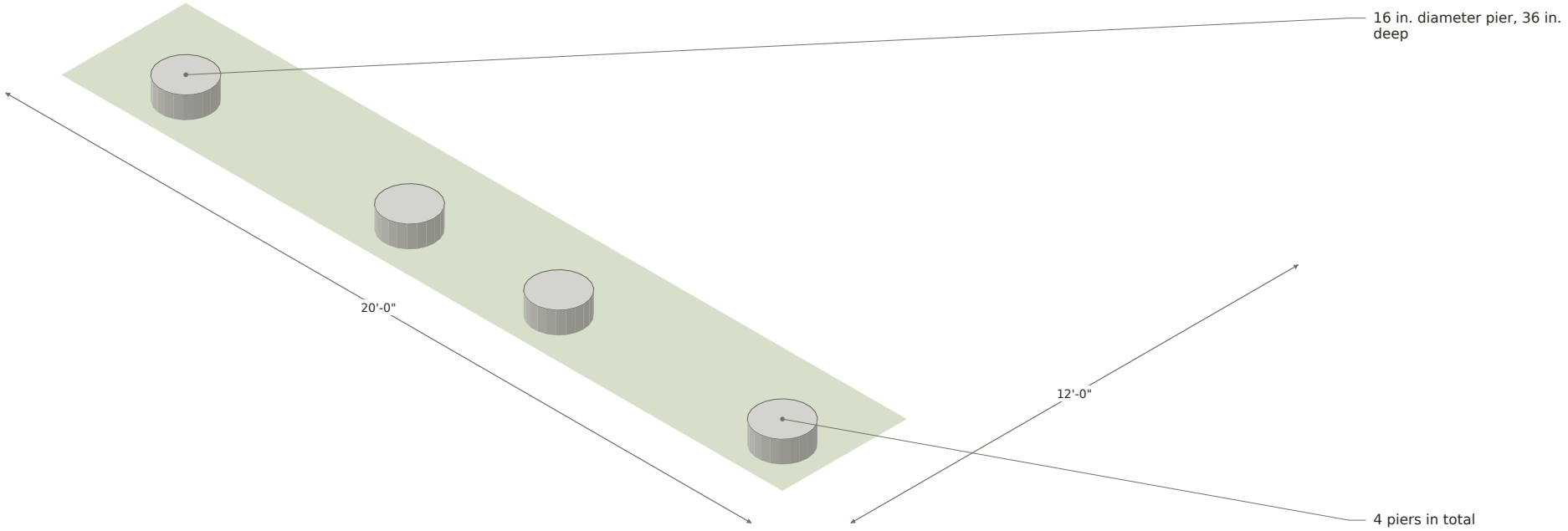

Fill each hole and bring the top of the pier level with, or just above, the surrounding grade. Check the pier centres against your string lines while the concrete is still workable.

STAGE 8 Set the post bases

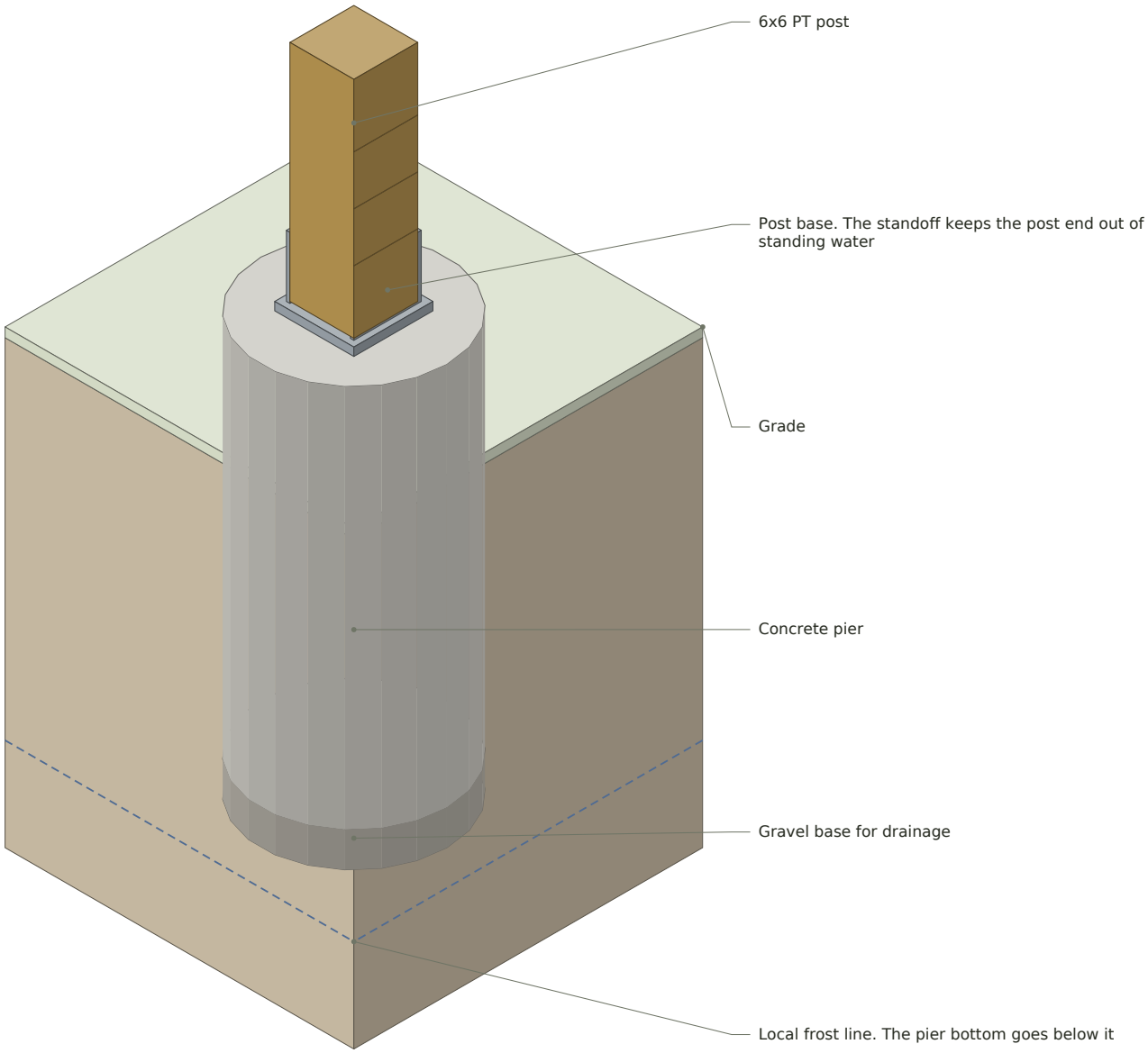

Set a galvanised base into each pier before the concrete goes off, or bolt it down afterwards with the anchors the plans call for. The base holds the post off the concrete so water cannot sit against end grain.

STAGE 9 Set the posts and cut them to height

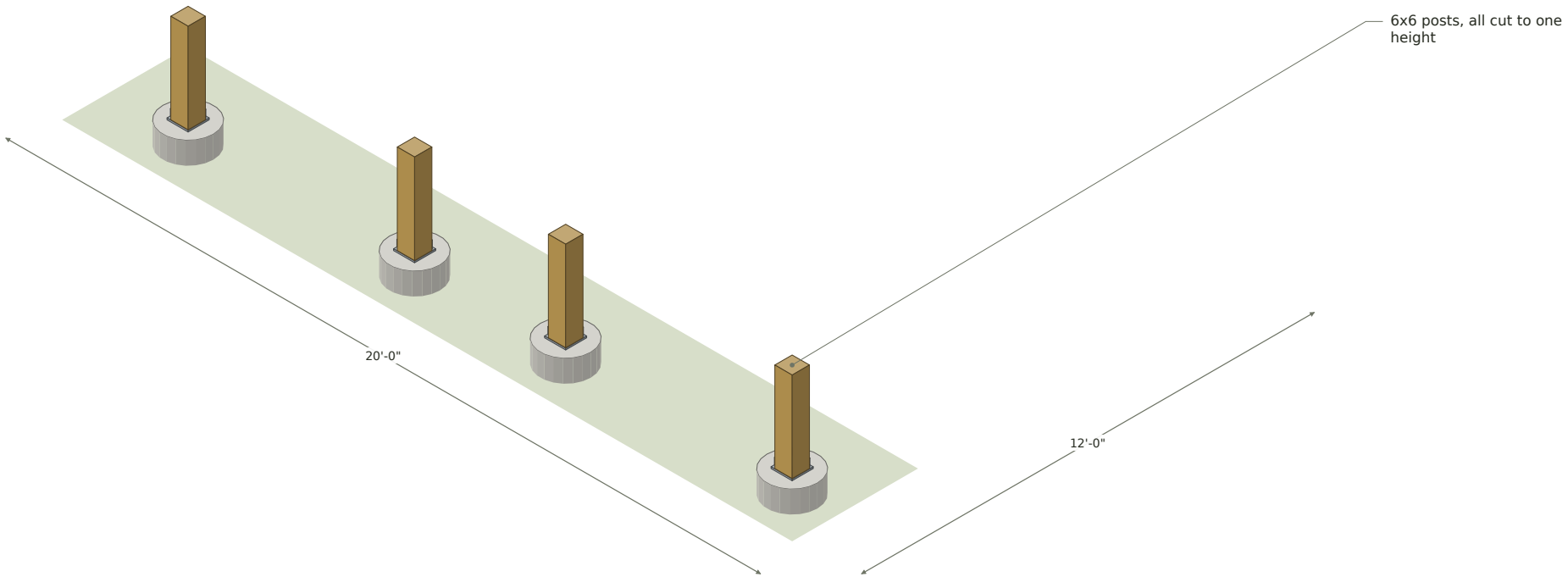

Stand a post in every base and plumb it. Mark one post at the beam height, transfer that mark to the others with a level, and cut them all to the same line. Every post out of level shows up in the deck surface.

STAGE 10 Build and set the beams

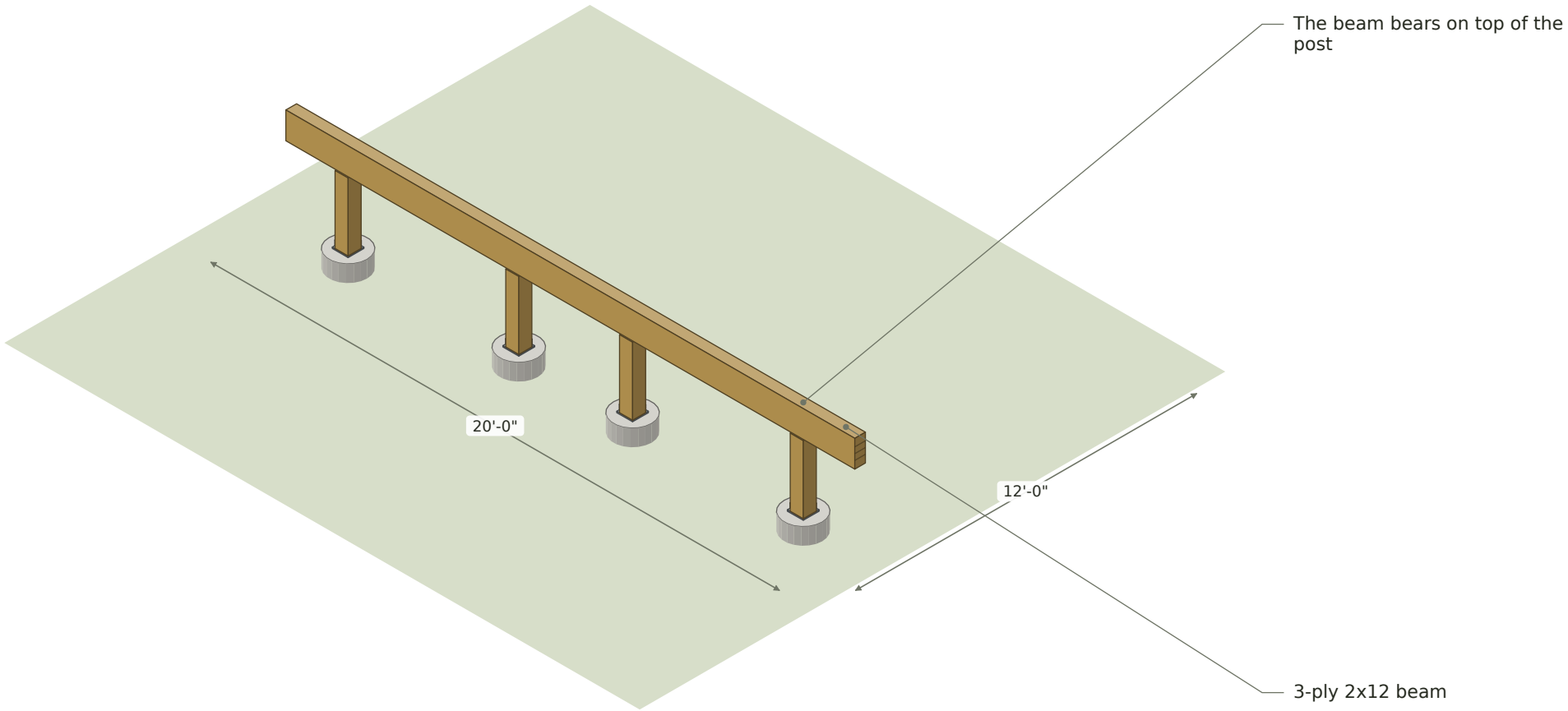

Nail the plies together face to face, lift each beam onto its posts and fasten it down with the caps on the plans. The beam bears on top of the posts. Nothing structural hangs off fasteners driven into the side of a post.

STAGE 11 Nail the hangers off

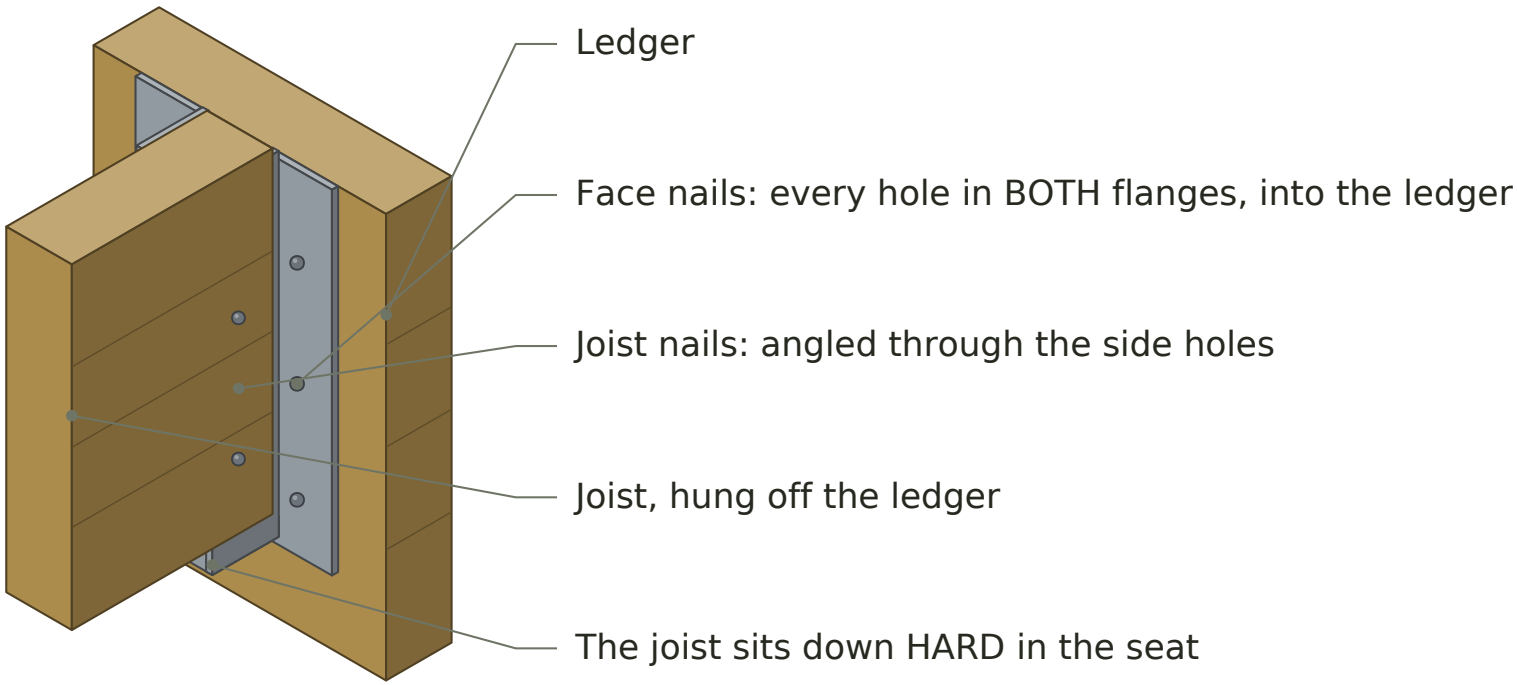

Every hole in the hanger takes a fastener, including the angled ones through the joist into the beam. Those angled nails are the most skipped fastener on a home-built deck and they are what the hanger is rated on.

STAGE 12 Hang the joists

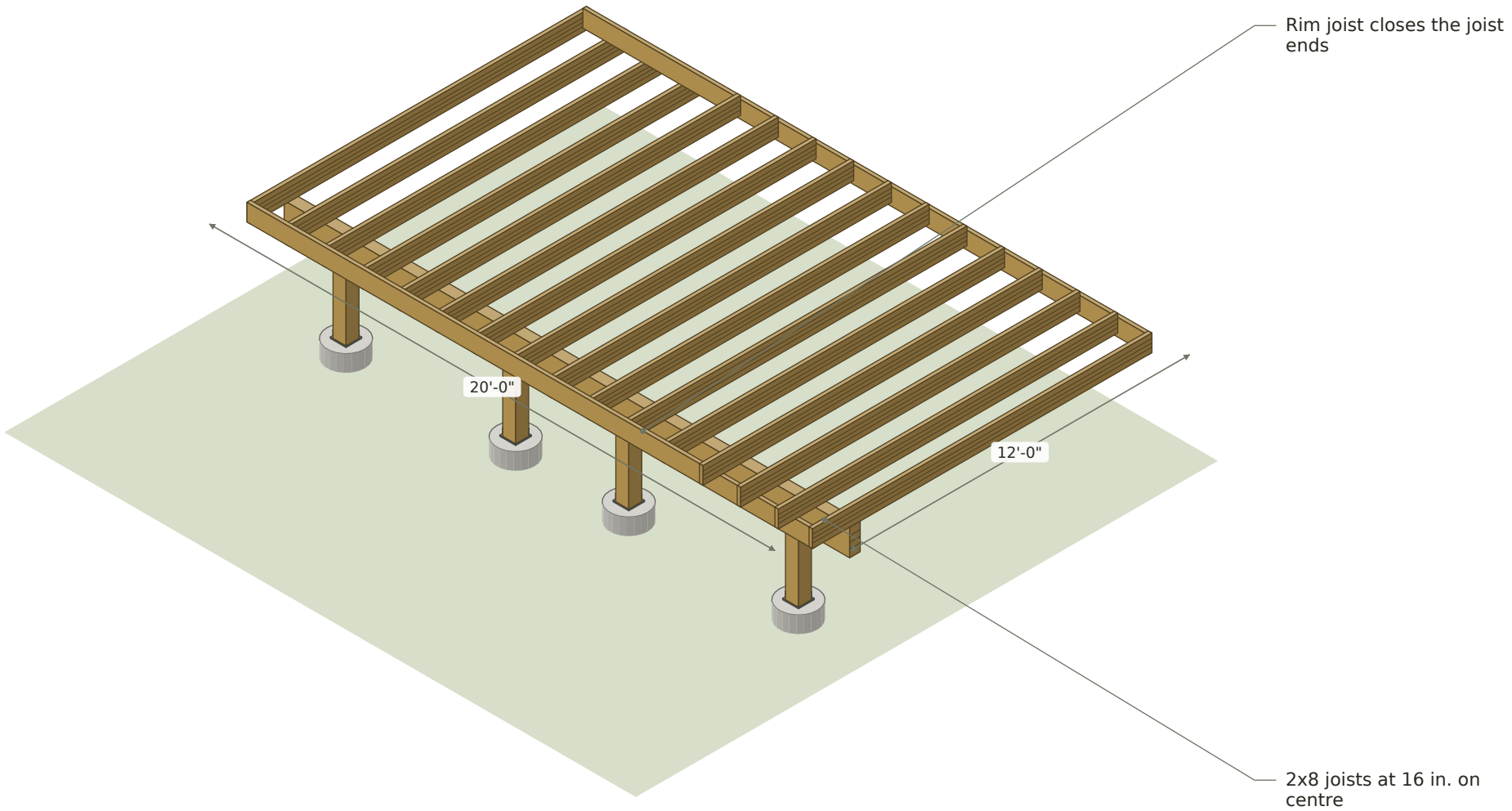

Mark the joist positions along both beams, fix a hanger at every mark, then drop the joists in. Measure both diagonals across the frame and adjust before you nail off, not afterwards.

STAGE 13 Bolt on the guard posts

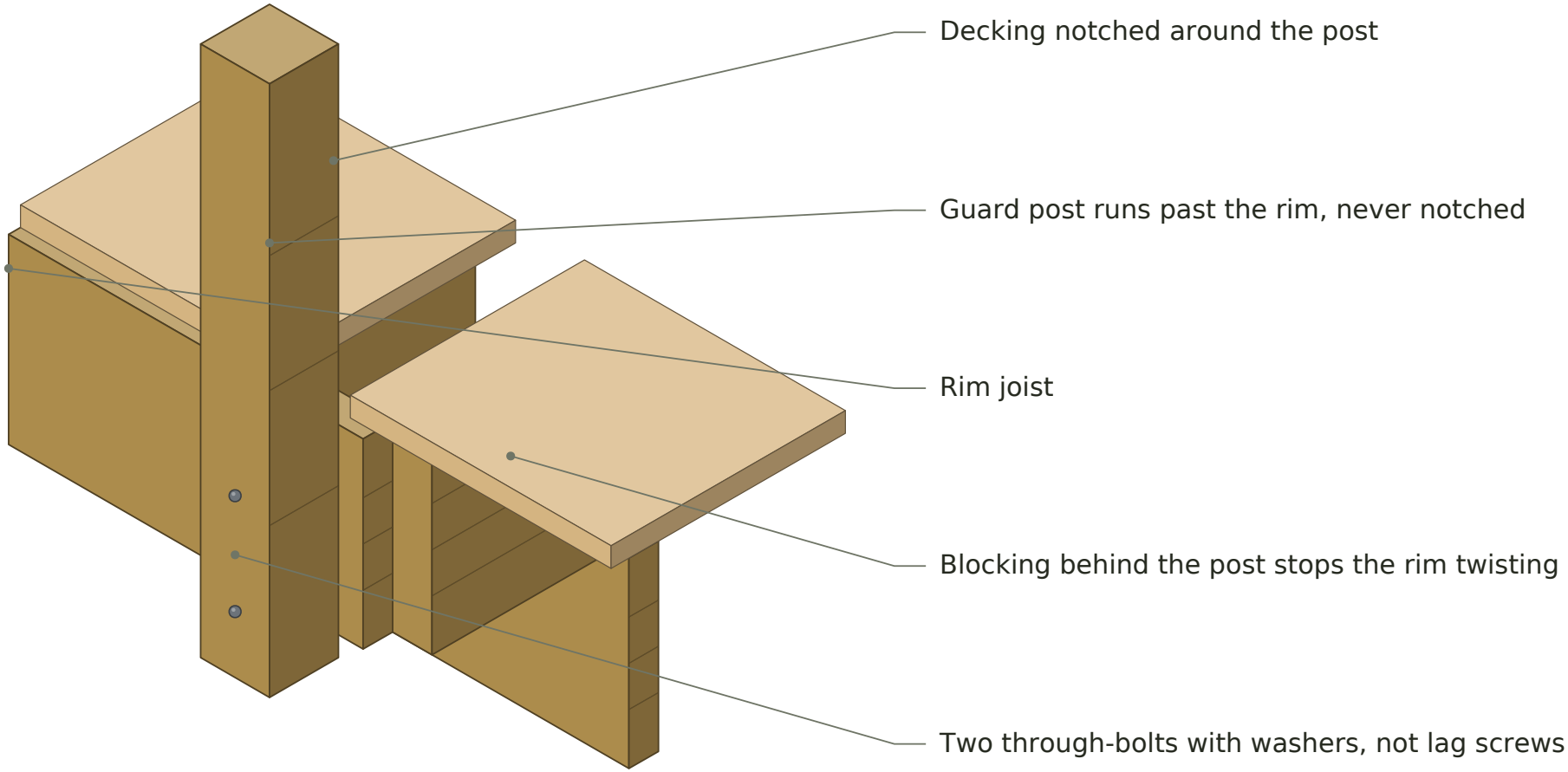

Set every guard post now, while the frame is still open. Each one through-bolts to the rim joist with a block behind it so the rim cannot twist when someone leans on it. Lag screws into the end grain of a rim will not hold, and a post notched to fit around the rim is weaker still. This is one of the connections the framing inspector looks at, and it disappears under the decking, so do not cover it before it has been seen.

STAGE 14 Lay the decking

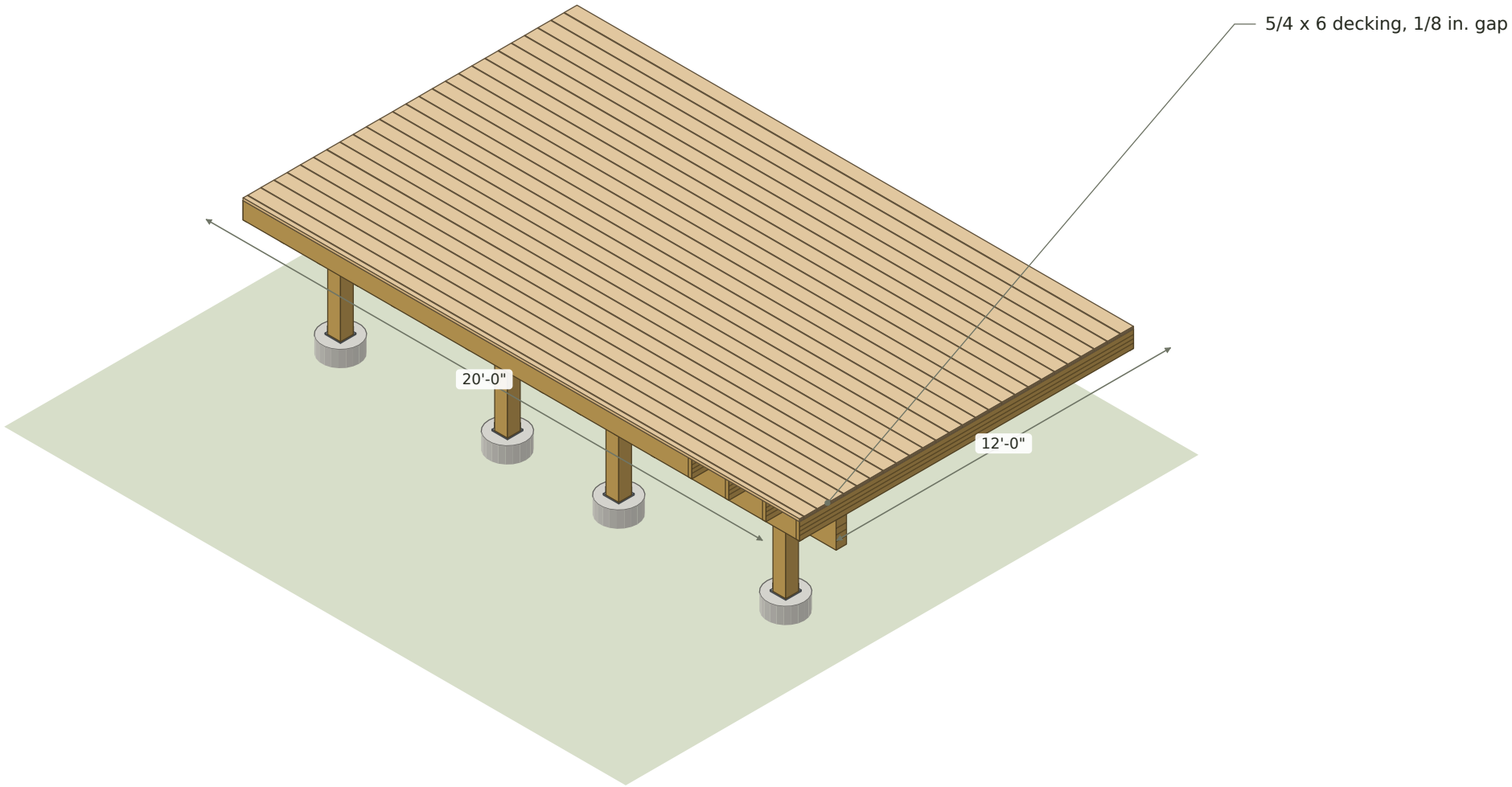

Start at one edge and work across, keeping a consistent 1/8 in. gap between the 5/4 x 6 boards. Check your line every few boards: a small drift repeated twenty times is a visibly crooked deck at the far edge.

STAGE 15 Fasten the boards

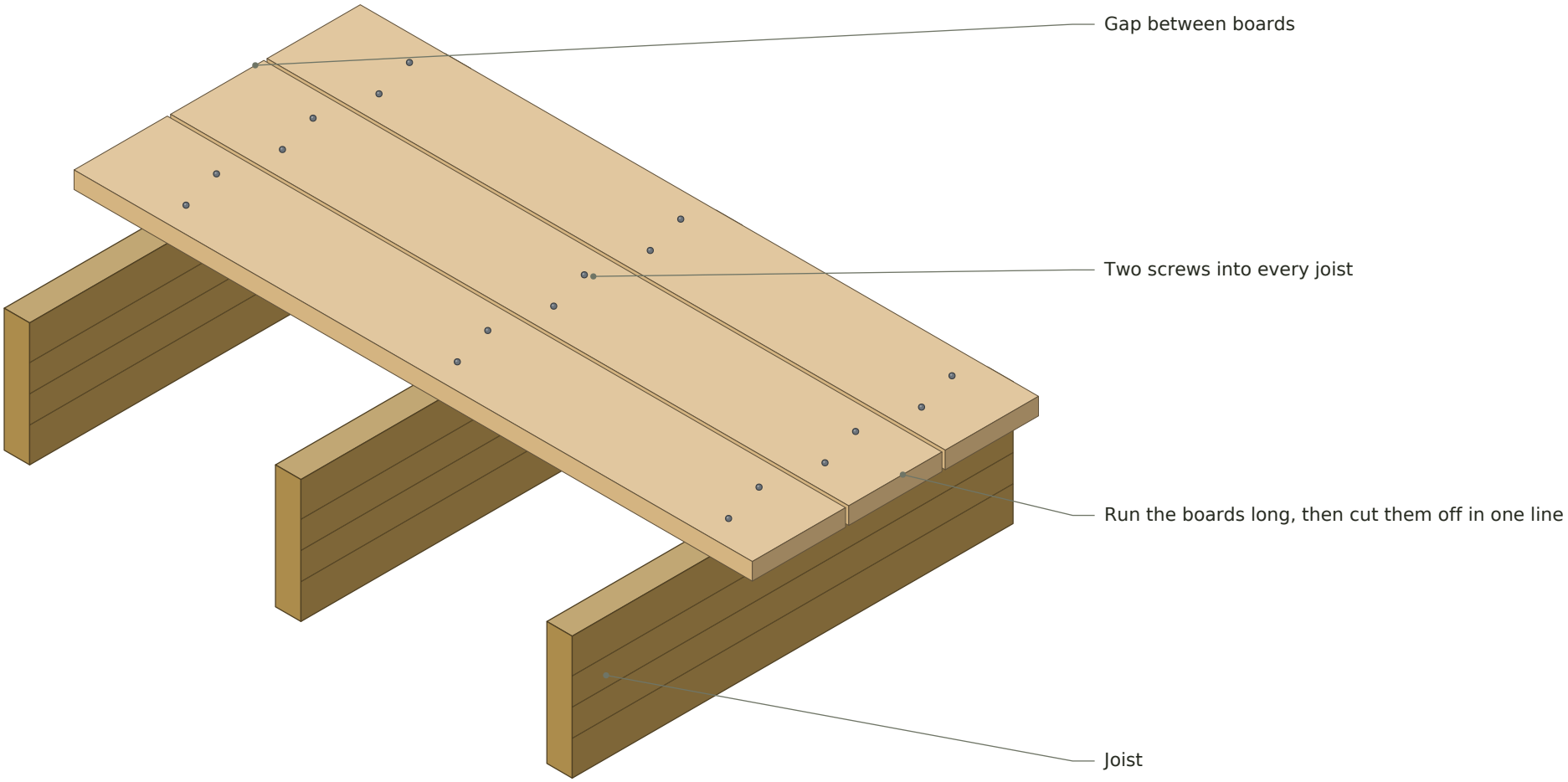

Two deck screws into every joist, set back from the ends of the board so the wood does not split. Drive them flush rather than sinking them, and keep the gap even as you go.

STAGE 16 Lay out the stringers

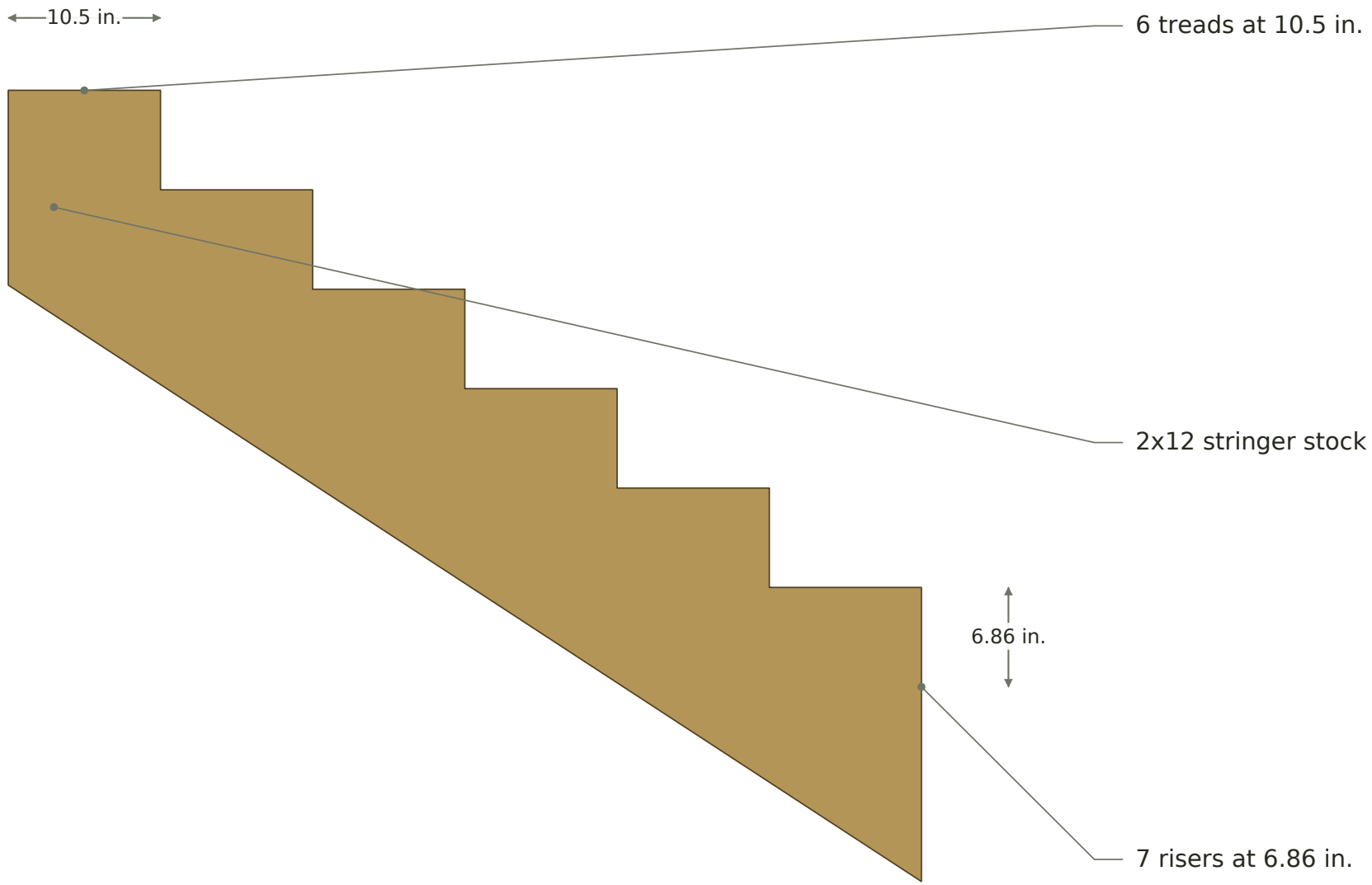

Mark the rise and the run along the stringer with a square, working from one end so the errors do not accumulate. Cut one, test-fit it against the frame, and only then use it as the pattern for the rest.

STAGE 17 Cut and hang the stairs

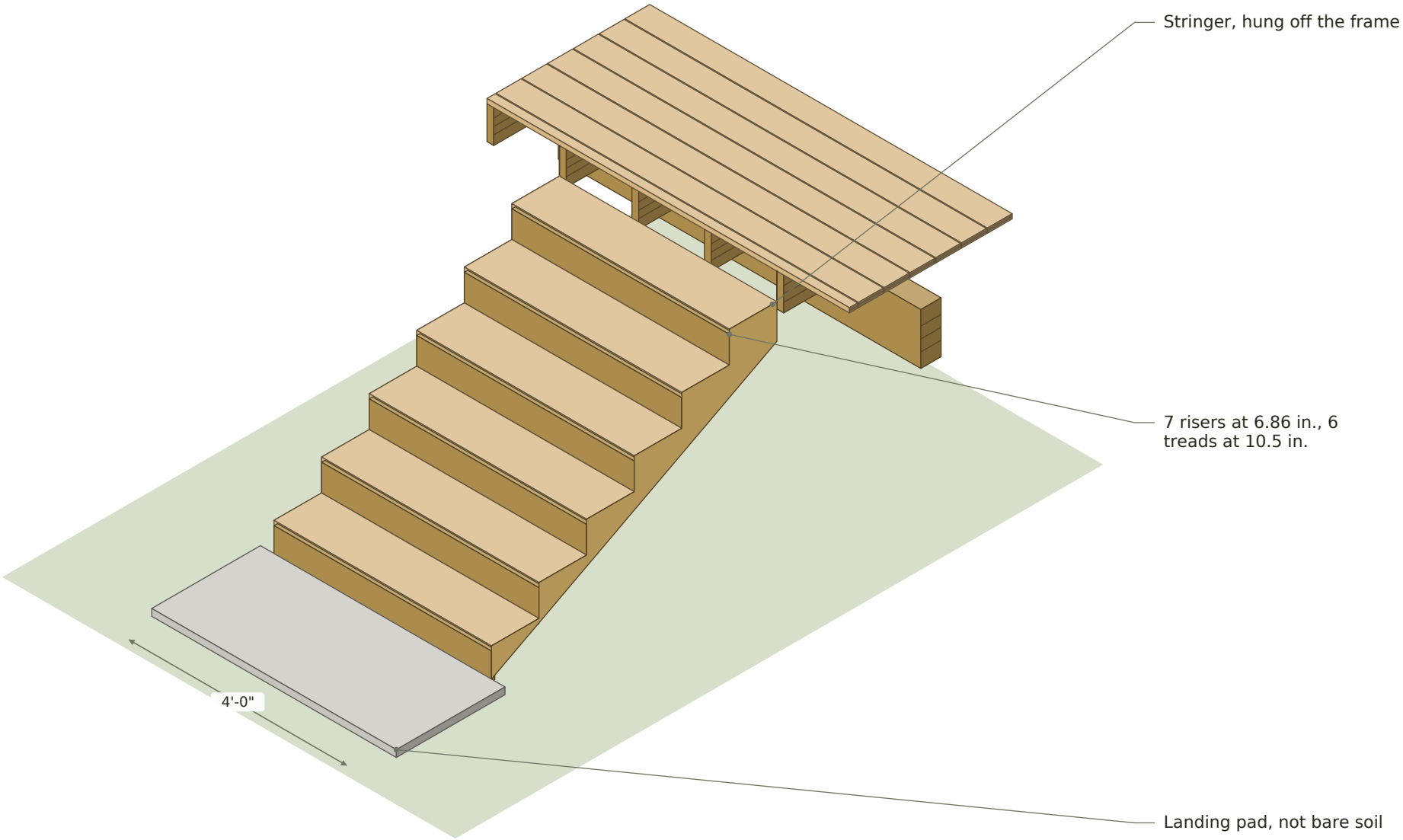

Hang the stringers off the frame, never off the decking, and land them on a solid pad rather than on bare soil. Check that every rise comes out the same, including the first step off the deck and the last one onto the pad.

STAGE 18 Build the guard

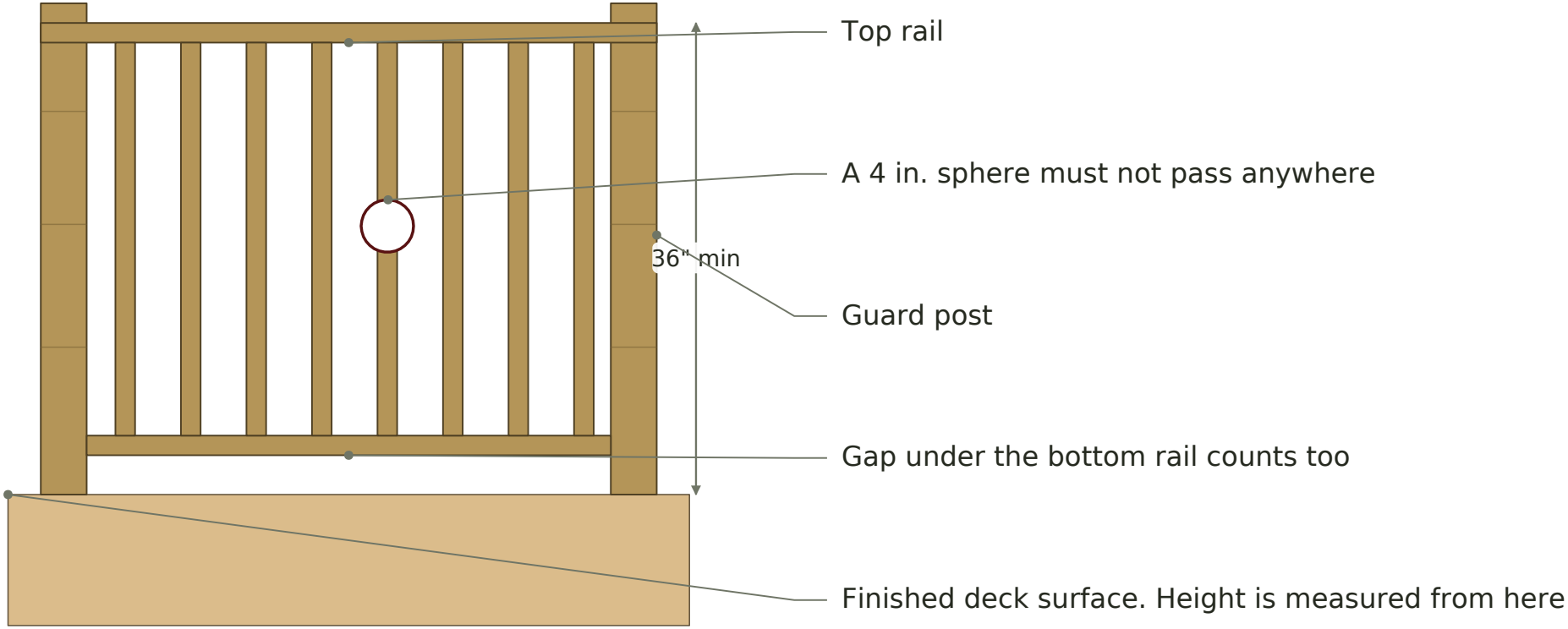

With the posts already bolted on, run the top and bottom rails between them and fill the space. No gap anywhere in the finished guard may pass a 4 in. sphere, including the gap under the bottom rail, and an inspector will check it with a ball. Measure the gaps rather than the baluster centres. Your stairs need a graspable handrail as well, running the whole way down.

STAGE 19 Final checks

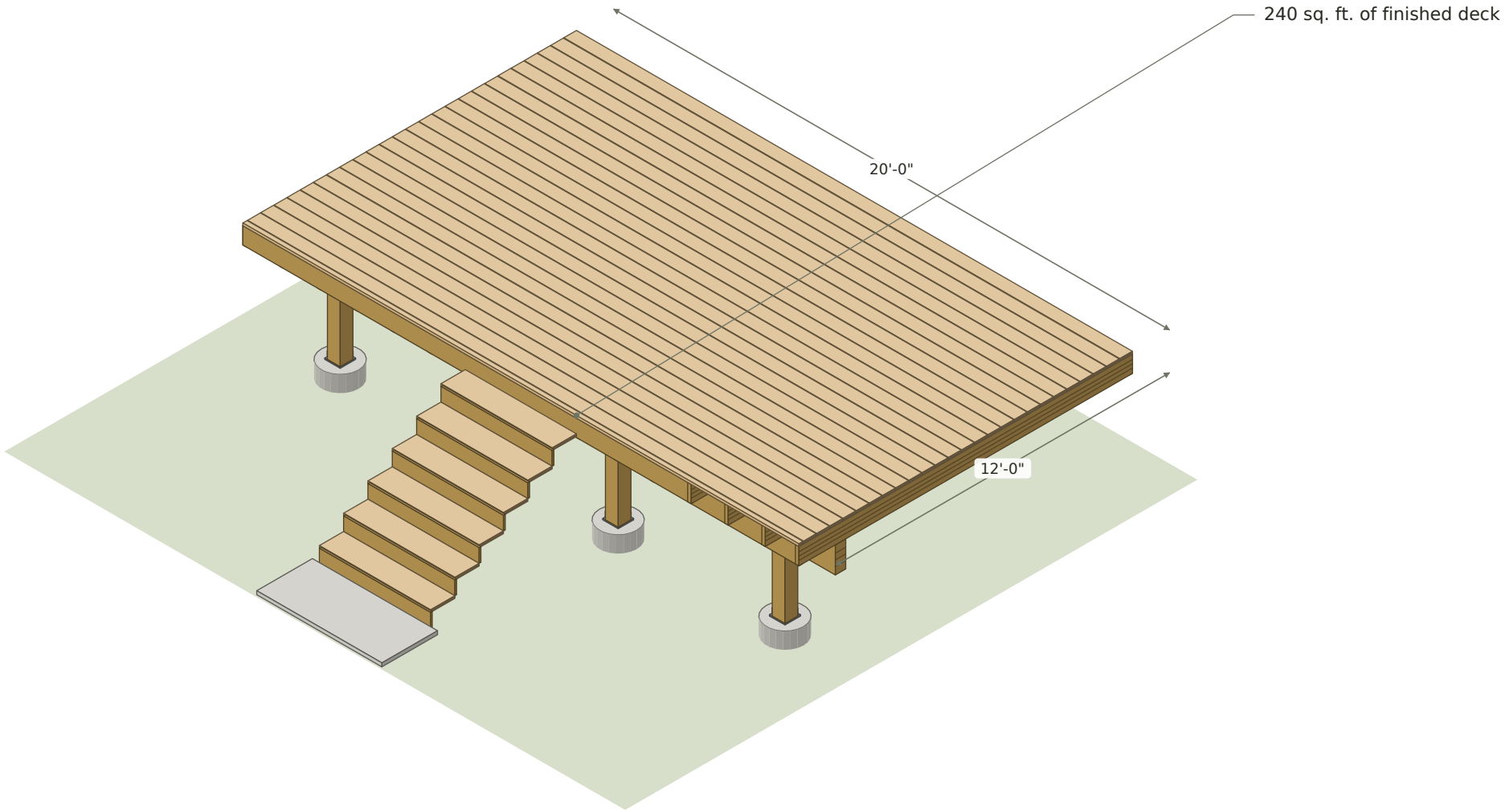

Walk the whole deck. Every fastener driven home, every board gapped the same, nothing rocking underfoot. Compare what you have built against the plan sheets before you call for the final inspection.